LANDGATE COPY OF ORIGINAL NOT TO SCALE 06/08/2026 09:19 AM Request number: 70212235
www.landgate.wa.gov.au

# STRATA PLAN 77130

SHEET 1 OF 3 SHEETS

PLAN OF
LOT 44 ON P 11277

CERTIFICATE OF TITLE
VOLUME 1413 FOLIO 904

LOCAL GOVERNMENT
CITY OF JOONDALUP

FIELD RECORD
140754

NAME OF SCHEME
21 STRATHYRE DRIVE
DUNCRAIG

ADDRESS OF PARCEL
21 STRATHYRE DRIVE
DUNCRAIG WA 6023

MANAGEMENT STATEMENT ~~YES~~ NO

SURVEYOR'S CERTIFICATE - REG 54

I, PAUL SAID
hereby certify that this plan is accurate and is a correct representation of the -
(a) *survey; and/or
(b) *calculations from measurements recorded in the field records,
[* delete if inapplicable]
undertaken for the purposes of this plan and that it complies with the relevant written law(s) in relation to which it is lodged.

Paul Said
2018.03.13 15:18:10 +08'00'
LICENSED SURVEYOR DATE

LODGED
26-Feb-2018 $705.00 375099
DATE FEE PAID ASSESS No.

EXAMINED
MM 14.3.2018
DATE

WESTERN AUSTRALIAN PLANNING COMMISSION
W.A.P.C. REF:
Certificate of Approval of W.A.P.C. under Section 25B(2) of *Strata Titles Act 1985*
Delegated under S.16 P&D Act 2005 DATE

PLAN APPROVED
30.4.2018
INSPECTOR OF PLANS AND SURVEYS DATE
(S. 18 Licensed Surveyors Act 1909)

IN ORDER FOR DEALINGS
SUBJECT TO

30.4.2018
FOR REGISTRAR OF TITLES DATE

N892216 REGISTERED
APPLICATION
9.5.2018
DATE REGISTRAR OF TITLES SEAL

GOVERNMENT OF WESTERN AUSTRALIA

Landgate

| VER. | AMENDMENT | AUTHORISED BY | DATE |
|---|---|---|---|
| 2 | AUDIT REQUIREMENTS | P. SAID | 13.03.18 |

## LOCATION PLAN

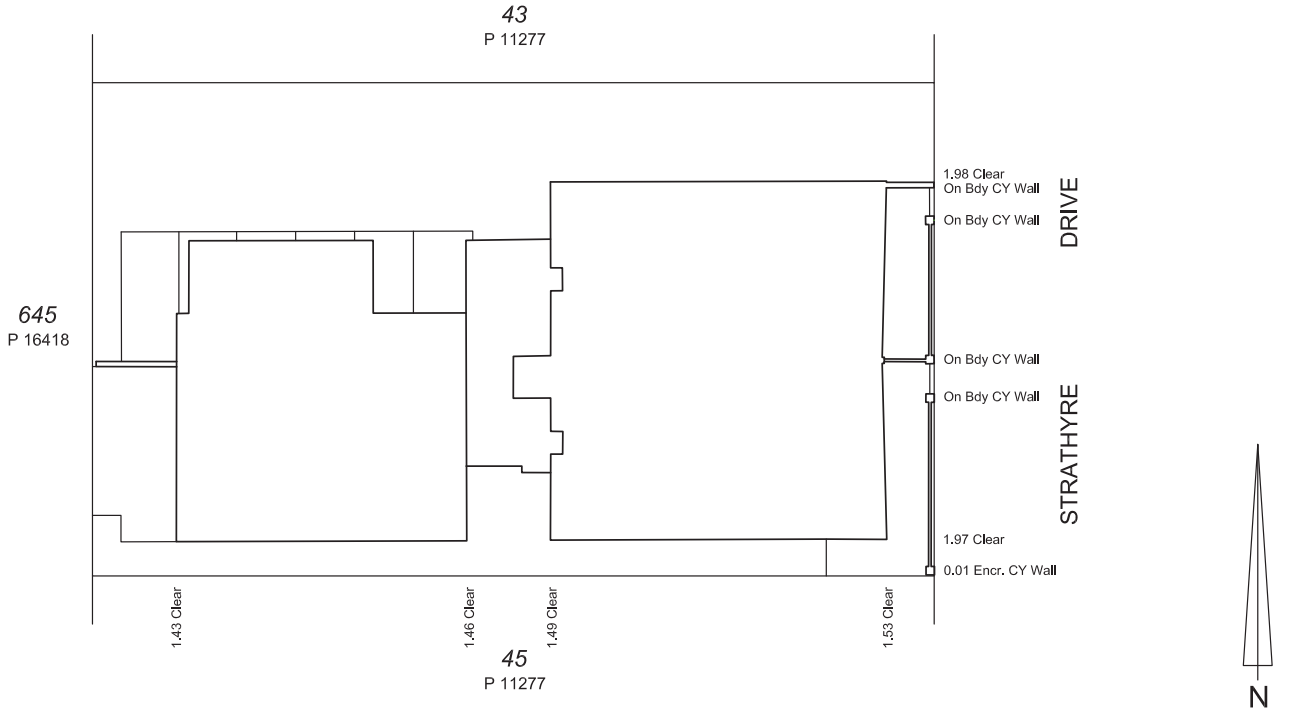


## INTERESTS AND NOTIFICATIONS

| SUBJECT | PURPOSE | STATUTORY REFERENCE | ORIGIN | LAND BURDENED | BENEFIT TO | COMMENTS |
|---|---|---|---|---|---|---|
| | MINERAL RESERVATION | | DOC T6081/1929 | LOTS 1 - 6 INC & CP | | |
| | | | | | | |

ST SPATIAL
CONSULTING SURVEYORS
www.stspatial.com.au
P.O. Box 556 Balcatta WA 6914
T 08 9349 2062
F 08 9349 2167
E info@stspatial.com.au
Our Ref: 17086

HELD BY LANDGATE IN DIGITAL FORMAT ONLY

LANDGATE COPY OF ORIGINAL NOT TO SCALE 06/08/2026 09:19 AM Request number: 70212235

www.landgate.wa.gov.au

STRATA PLAN

# 77130

SHEET 2 OF 3 SHEETS

## GROUND FLOOR PLAN

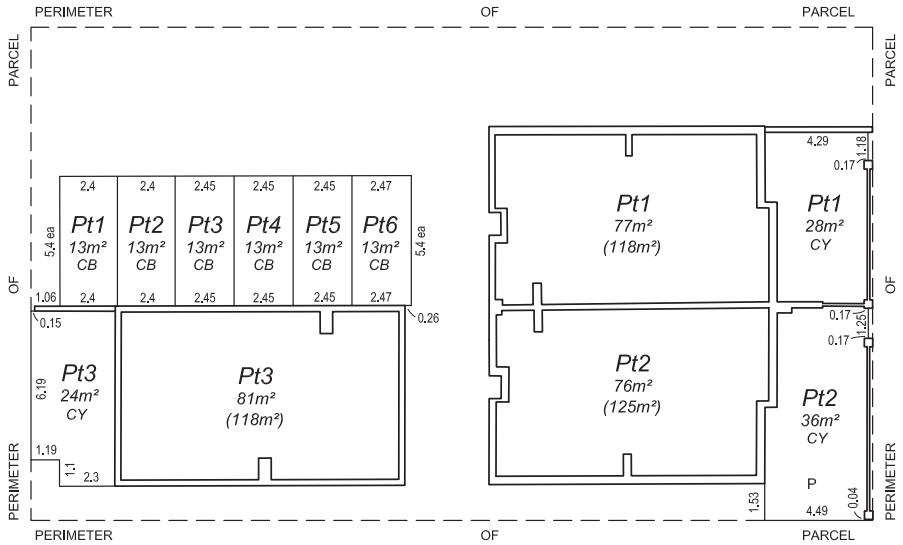


THE BOUNDARIES OF THE LOTS OR PARTS OF THE LOTS WHICH ARE BUILDINGS SHOWN ON THE STRATA PLAN ARE THE INNER SURFACES OF THE WALLS, THE UPPER SURFACE OF THE FLOOR AND THE UNDER SURFACE OF THE CEILING, AS PROVIDED BY SECTION 3(2)(a) OF THE STRATA TITLES ACT 1985

THE STRATUM OF THE PART LOTS WHICH ARE CAR BAYS (CB) EXTENDS FROM THE UPPER SURFACE OF THEIR FLOOR TO THE UNDERSIDE OF THEIR CEILING OR TO A HEIGHT OF 2.5 METRES EXCEPT WHERE COVERED.

THE BOUNDARIES OF THE PARTS LOTS WHICH ARE COURTYARDS (CY) ARE THE INNER SURFACES OF THE COURTYARD WALLS AND THE EXTERNAL SURFACES OF THE BUILDING WALLS AND EXTEND BETWEEN THE UPPER SURFACE OF IT'S FLOOR AND THE PROLONGATION OF THE UNDERSIDE OF THE CEILING OF THEIR RESPECTIVE ADJOINING PART LOT, WHERE NOT COVERED.

ANGLES ARE 90° UNLESS STATED OTHERWISE.

PILLARS AND DUCTS ARE COMMON PROPERTY

CB - DENOTES CAR BAY

CY - DENOTES COURTYARD

FOR OTHER PARTS OF LOTS 4 ,5 AND 6 SEE SHEET 3

N

SCALE 1:200 @ A3

4 2 0 2 4 6 8

ALL DISTANCES ARE IN METRES

HELD BY LANDGATE IN DIGITAL FORMAT ONLY

LANDGATE COPY OF ORIGINAL NOT TO SCALE 06/08/2026 09:19 AM Request number: 70212235

www.landgate.wa.gov.au

STRATA PLAN

# 77130

SHEET 3 OF 3 SHEETS

## FIRST FLOOR PLAN

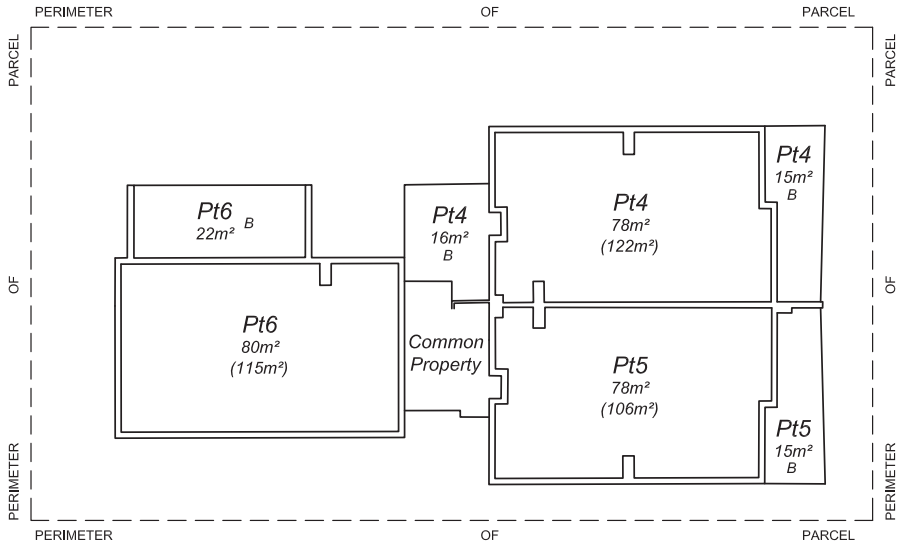


THE BOUNDARIES OF THE LOTS OR PARTS OF THE LOTS WHICH ARE BUILDINGS SHOWN ON THE STRATA PLAN ARE THE INNER SURFACES OF THE WALLS, THE UPPER SURFACE OF THE FLOOR AND THE UNDER SURFACE OF THE CEILING, AS PROVIDED BY SECTION 3(2)(a) OF THE STRATA TITLES ACT 1985

THE BOUNDARIES OF THE PART LOTS WHICH ARE BALCONIES (B) ARE THE EXTERNAL SURFACES OF THE BUILDING WALLS, THE INTERNAL SURFACES OF THE BALCONY WALLS OR THE EDGE OF THE CONCRETE SLAB AND EXTEND BETWEEN THE UPPER SURFACE OF IT'S FLOOR AND THE PROLONGATION OF THE UNDERSIDE OF THE CEILING OF THEIR RESPECTIVE ADJOINING PART LOT, WHERE NOT COVERED.

ANGLES ARE 90° UNLESS STATED OTHERWISE.

PILLARS AND DUCTS ARE COMMON PROPERTY

B - DENOTES BALCONY

THIS SHEET OVERLAYS WITH SHEET 2 OF 3

FOR OTHER PARTS OF LOTS 4 ,5 AND 6 SEE SHEET 2

FOR PARTS OF LOTS 1 ,2 AND 3 SEE SHEET 2

N

SCALE 1:200 @ A3

4 2 0 2 4 6 8

ALL DISTANCES ARE IN METRES

HELD BY LANDGATE IN DIGITAL FORMAT ONLY

**FORM 3**

| STRATA PLAN No. 77130 | | | | | |
|---|---|---|---|---|---|
| Schedule of Unit Entitlement | | Office Use Only Current Cs of Title | | Schedule of Unit Entitlement | | Office Use Only Current Cs of Title | |
| Lot No, | Unit Entitlement | Vol. | Fol. | Lot No, | Unit Entitlement | Vol. | Fol. |
| 1 | 33 | | | | | | |
| 2 | 33 | | | | | | |
| 3 | 33 | | | | | | |
| 4 | 34 | | | | | | |
| 5 | 33 | | | | | | |
| 6 | 34 | | | | | | |
| | | | | | | | |
| | | | | | | | |
| | | | | | | | |
| | | | | | | | |
| | | | | | | | |
| | | | | | | | |
| | | | | | | | |
| | | | | | | | |
| | | | | Aggregate | 200 | | |

**DESCRIPTION OF PARCEL AND BUILDING**

A two storey rendered brick and metal building
comprising 6 Residential Units situated on Lot 44 on Plan 11277.
The address is 21 Strathyre Drive, Duncraig, WA, 6023.

**CERTIFICATE OF LICENSED VALUER**
**STRATA**

I, **Darren Starcevich**, being a Licensed Valuer licensed under the *Land Valuers Licensing Act 1978* certify that the unit entitlement of each lot (in this certificate, excluding any common property lots), as stated in the schedule bears in relation to the aggregate unit entitlement of all lots delineated on the plan a proportion not greater than 5% more or 5% less than the proportion that the value (as that term is defined in section 14 (2a) of the *Strata Titles Act 1985*) of that lot bears to the aggregate value of all the lots delineated on the plan.

09-Feb-2018
Date

Digitally signed by
Darren Starcevich
AAPI Licensed Valuer
No. 44415
Signed

LANDGATE COPY OF ORIGINAL NOT TO SCALE 06/08/2026 09:19 AM Request number: 70212235
Landgate
www.landgate.wa.gov.au

# FORM 5

*Strata Titles Act 1985*

Sections 5B(1), 8A, 22(1)

**STRATA PLAN No.** 77130

## DESCRIPTION OF PARCEL & BUILDING

A Two Storey Rendered Brick & Metal Building Comprising 6 Residential Units Situated On Lot 44 On Plan 11277
The Address Is 21 Strathvre Drive, Duncraig WA 6023

## CERTIFICATE OF LICENSED SURVEYOR

I, Paul Said . . . . . ., being a licensed surveyor registered under the *Licensed Surveyors Act 1909* certify that in respect of the strata plan which relates to the parcel and building described above (in this certificate called "the plan"): —

(a) each lot that is not wholly within a building shown on the plan is within the external surface boundaries of the parcel*;* and either

~~(b) each building shown on the plan is within the external surface boundaries of the parcel; or~~

(c) in a case where a part of a wall or building, or material attached to a wall or building, encroaches beyond the external surface boundaries of the parcel —

(i) all lots shown on the plan are within the external surface boundaries of the parcel;

(ii) the plan clearly indicates the existence of the encroachment and its nature and extent*;* and

(iii) where the encroachment is not on to a public road, street or way, that an appropriate easement has been granted and will be lodged with the Registrar of Titles to enable it to be registered as an appurtenance of the parcel; and

~~*(d) if the plan is a plan of re-subdivision, it complies with Schedule 1 by-law(s) no(s) . . . . . on Strata Plan No. . . . . registered in respect of (name of scheme) or sufficiently complies with that/those by-law(s) in a way that is allowed by regulation 36 of the *Strata Titles General Regulations 1996*.~~

Paul Said
2018.02.15 16:03:32 +08'00'

. . . . . .
Licensed Surveyor Date

*Delete if inapplicable

LANDGATE COPY OF ORIGINAL NOT TO SCALE 06/08/2026 09:19 AM Request number: 70212235

Landgate
www.landgate.wa.gov.au

# PERMIT FORM BA12

## Occupancy Permit - Strata

*Western Australian Building Act 2011*, s.50, s.61
*Building Regulations 2012*, r.4

OFFICE USE ONLY

Permit number: OP18/0010

**This form is for the purposes of the *Building Act 2011*, s.50 and the *Strata Titles Act 1985*, s.5B(2)(a) & 8A(f)(i)**

### 1. Details of building or structure

| | | | |
|---|---|---|---|
| Certificate of Title | Volume<br>1413 | Folio<br>904 | |
| Lot on survey | 44 | | |
| Strata Plan Number | 77130 | Land being re-subdivided (if applicable) | |
| Property street address | 21 Strathyre Drive DUNCRAIG WA 6023 | | |
| Description of building | Class 2 - 6 Brick & Metal Deck Residential Multiple Dwellings<br>Class 10b – Front Screen Wall & Retaining Wall | | |
| Main BCA class of the building | 2 | Secondary BCA class (for multi-purpose buildings)<br>10b | |
| Use(s) of building | **Residential Multiple Dwellings x 6** | Each restriction on use (if applicable) | |

### 2. Permit Details

This occupancy permit is for: ☒ Whole of building ☐ Part of building

Details Brick and Metal Deck Residential Multiple Dwellings & Front Screen wall & Retaining Wall

Western Australian Planning Commission approval required ☒ Yes ☐ No

All requirements including those for encroachments under s.76 of the *Building Act 2011*, in addition to those covered in the certificate of building compliance, have been met to the satisfaction of the permit authority.

This occupancy permit is for the purpose of lodging a strata plan for registration or to re-subdivide a strata scheme under the *Strata Titles Act 1985*.

| | ***Name: (print)*** | *Signature:* | *Date:* |
|---|---|---|---|
| ***Issuing officer*** | ***Reed Hartley*** | Reed Hartley | ***27/02/2018*** |
| ***Title*** | ***Senior Building Surveyor***<br>***Compliance & Regulatory Services*** | | |



LANDGATE COPY OF ORIGINAL NOT TO SCALE 06/08/2026 09:19 AM Request number: 70212235

Landgate
www.landgate.wa.gov.au

# PERMIT FORM BA12

## Occupancy Permit - Strata

*Western Australian Building Act 2011*, s.50, s.61
*Building Regulations 2012*, r.4

OFFICE USE ONLY

Permit number: OP18/0010

***Permit authority*** ***City of Joondalup***



LANDGATE COPY OF ORIGINAL NOT TO SCALE 06/08/2026 09:19 AM Request number: 70212235

Landgate
www.landgate.wa.gov.au

# FORM 26

~~WAPC Ref:~~ **STRATA PLAN NO** 77130

*Strata Titles Act 1985*

Sections 25(1), 25(4)

**CERTIFICATE OF GRANT OF APPROVAL BY WESTERN AUSTRALIAN PLANNING COMMISSION TO STRATA PLAN**

It is hereby certified that the approval of the Western Australian Planning Commission has been granted pursuant to section 25(1) of the *Strata Titles Act 1985* to —

*(i) the *Strata Plan/~~plan of re-subdivision/plan of consolidation~~ submitted on . . . . . 9-Feb-18 . . . . . and relating to the property described below;

*(ii) ~~the sketch submitted on . . . . . of the proposed *subdivision of the property described below into lots on a Strata Plan/re-subdivision / consolidation of the lots on the Strata Plan specified below, subject to the following conditions —~~

Property Description: Lot (or Strata Plan) No. . . . . Lot 44 On P 11277 . . . . . Location . . . . . 21 Strathyre Drive . . . . . Locality . . . . . Duncraig . . . . . Local Government . . . . . City of Joondalup . . . . .

Lodged by: . . . . . ST Spatial Pty Ltd . . . . . .

Date: . . . . . 15-Feb-18 . . . . . .

JO KEMPTON
Senior Urban Planner
Planning Services
For Chairman, Western Australian Planning Commission

. . . . . 24 April 2018 . . . .
Date

(*To be deleted as appropriate.)

LANDGATE COPY OF ORIGINAL NOT TO SCALE 06/08/2026 09:19 AM Request number: 70212235

Landgate
www.landgate.wa.gov.au

LANDGATE COPY OF ORIGINAL NOT TO SCALE 06/08/2026 09:19 AM Request number: 70212235

**FORM 8**

ANNEXURE 'A' OF STRATA PLAN NO. 77130 REGISTRAR OF TITLES

## SCHEDULE OF DEALINGS

| Dealings registered or recorded on Strata Plan | Instrument | | | | Signature of Registrar of Titles |
|---|---|---|---|---|---|
| | Nature | Number | Registered | Time | |
| | | | | | |
| | | | | | |
| | | | | | |
| | | | | | |
| | | | | | |
| | | | | | |
| | | | | | |
| | | | | | |
| | | | | | |
| | | | | | |
| | | | | | |
| | | | | | |
| | | | | | |

## SCHEDULE OF ENCUMBRANCES ETC.

| Instrument | | Particulars | Registered | Signature of Registrar of Titles | Cancellation | | | | Signature of Registrar of Titles |
|---|---|---|---|---|---|---|---|---|---|
| Nature | Number | | | | Nature | Number | Registered | Time | |
| | | | | | | | | | |
| | | | | | | | | | |
| | | | | | | | | | |
| | | | | | | | | | |
| | | | | | | | | | |
| | | | | | | | | | |
| | | | | | | | | | |
| | | | | | | | | | |
| | | | | | | | | | |
| | | | | | | | | | |
| | | | | | | | | | |
| | | | | | | | | | |
| | | | | | | | | | |
| | | | | | | | | | |
| | | | | | | | | | |
| | | | | | | | | | |
| | | | | | | | | | |

Note: Entries may be affected by subsequent endorsements.

www.landgate.wa.gov.au